Ausgeliefertes Produkt
Product delivered : **MOBILETT XP DIGITAL**

Serial No.

Prüfer: Tester:

Datum: Date:

ERZEUGNIS-STANDLISTE

PRODUCT STATUS LIST

Änderungs-Mitteilungsnummer ► / Change Number: 8795, 8812

ab / from Serial No. ►: 1001, 1009, 1017

lfd. Nr. / line No.	Sach-/Typennummer / Part/Type Number	Erzeugnisstand / Product Status; Bezeichnung / Description	sep. / ES	01	02	03	04	05	06	07	08	09	10	11	12	13	14	15	16	17	18	19	20	21	22	23	24	25	26	27	28	29	30
				▼ Ausführungsstand bzw. Versionsstand bzW. Schaltzustand / Version or index ▼																														
1	070 24 040 X074J	D102 (MOT_CTL)		1	►	►																											
2	056 08 240 X074J	D907 (MSR_ADP)		1	►	►																											
3	075 66 842 X074J	D909 (DPY)		1	►	►																											
4	075 66 735 X074J	D916 (CPU)		2	►	►																											
5	070 24 289 X074J	D916/J38 (EPROM)	VA0	0A																													
6	070 24 313 X074J	D916/J38 (EPROM)	VA0		0B	0B																											
7	075 66 792 X074J	D917 (OPT_ADP)		1	►	►																											
8	075 66 743 X074J	D927 (PWR)		1	►	2																											
9	070 24 107 X074J	D952 (CAP_CHG)		1	►	►																											
10	075 66 610 X074J	D962 (KV_INV)		1	►	►																											
11	075 66 636 X074J	D972 (CAP_BK)		1	►	►																											
12	083 90 234 X074J	D982 (BAT_CHG)		1	►	►																											
13	075 66 768 X074J	D991 (CON_ADP)		1	►	►																											
14	SPR8-230.844.30.02.02	WIRING DIAGRAMS		01	02	02																											
15	075 66 859 X074J	D919 (ADAP_PC)		1	►	►																											
16																																	
17																																	
18																																	
19																																	
20																																	
21																																	
22																																	
23																																	
24																																	
25																																	
26																																	
27																																	

	04	05	06	07	08	09	10	11
Modific. No.								
Name								
Date								

Verified			
Drawed	J.A. Valencia	26/04/05	
2004	Carlos Arrimadas	26/04/05	
	Name	Date	

SIEMENS
Fábrica GETAFE MED

MOBILETT XP DIGITAL

	01	02	03
Modific. No.	8795	8812	
Name	C.Arrimadas	C.Arrimadas	
Date	09-02-05	26-04-05	

018 18 447 X074J

Sheet 1/1

File: MobilettStatusList.xls MED A4

MOBILETT XP DIGITAL
HW OVERVIEW

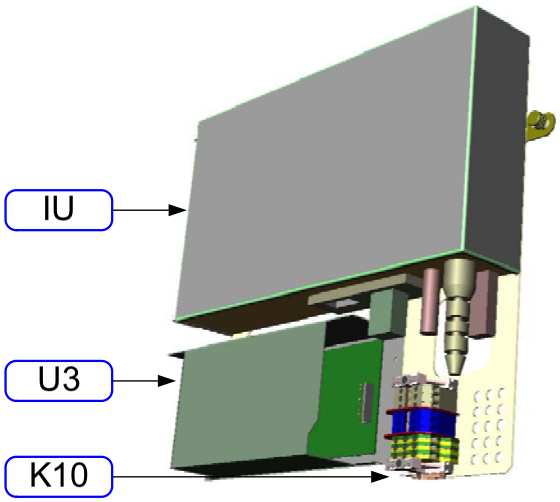

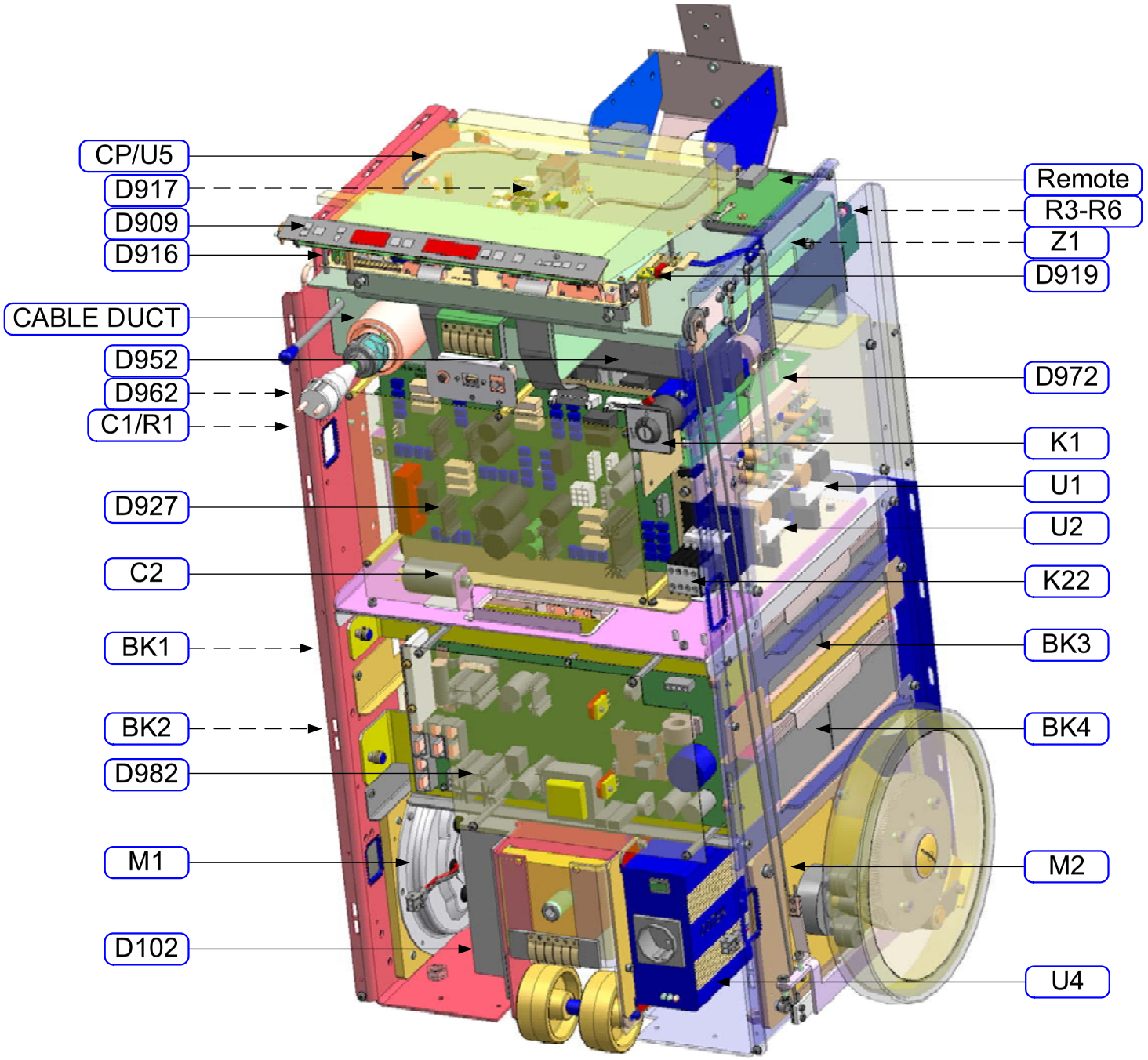

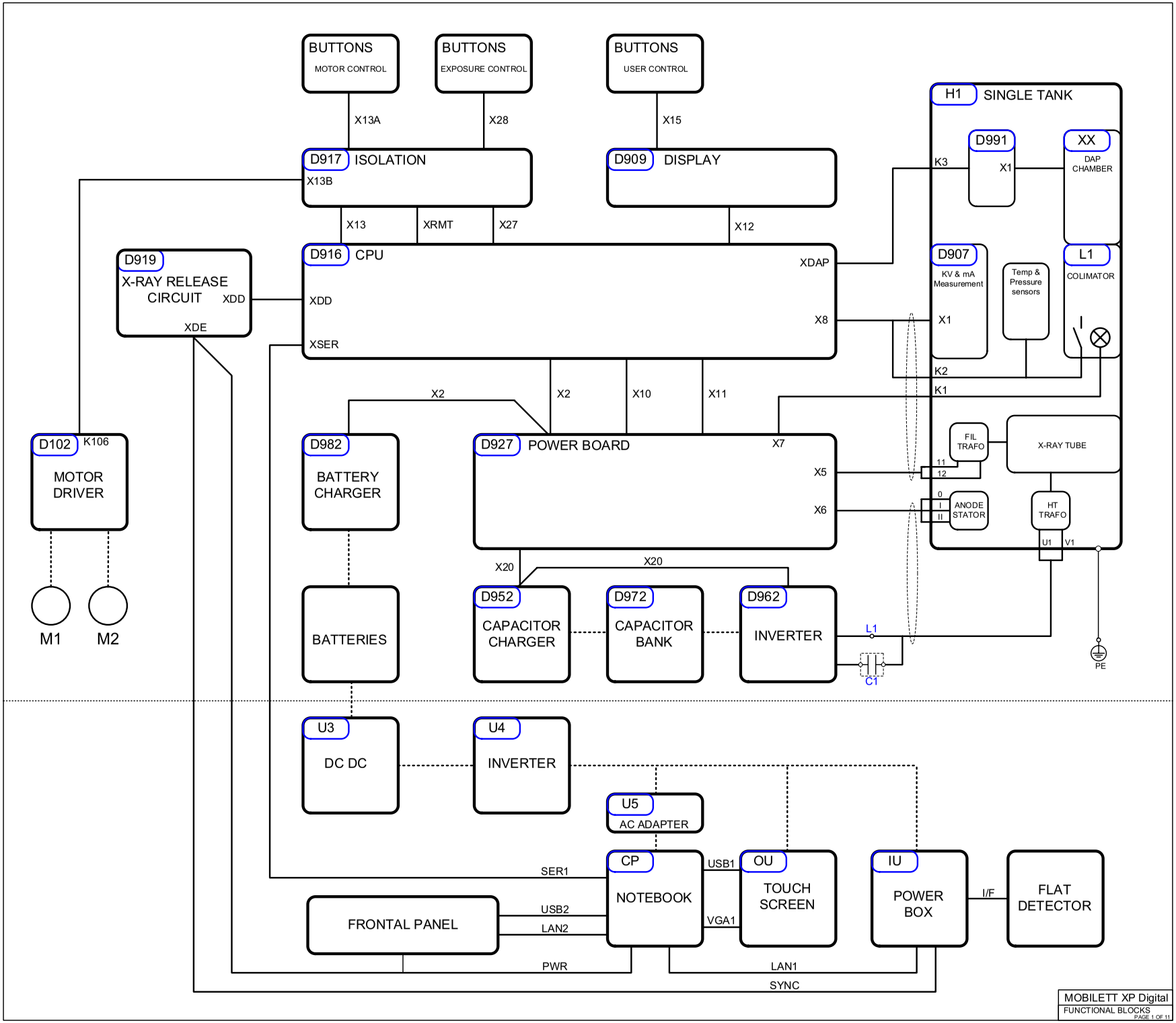

MOBILETT XP Digital
FUNCTIONAL BLOCKS

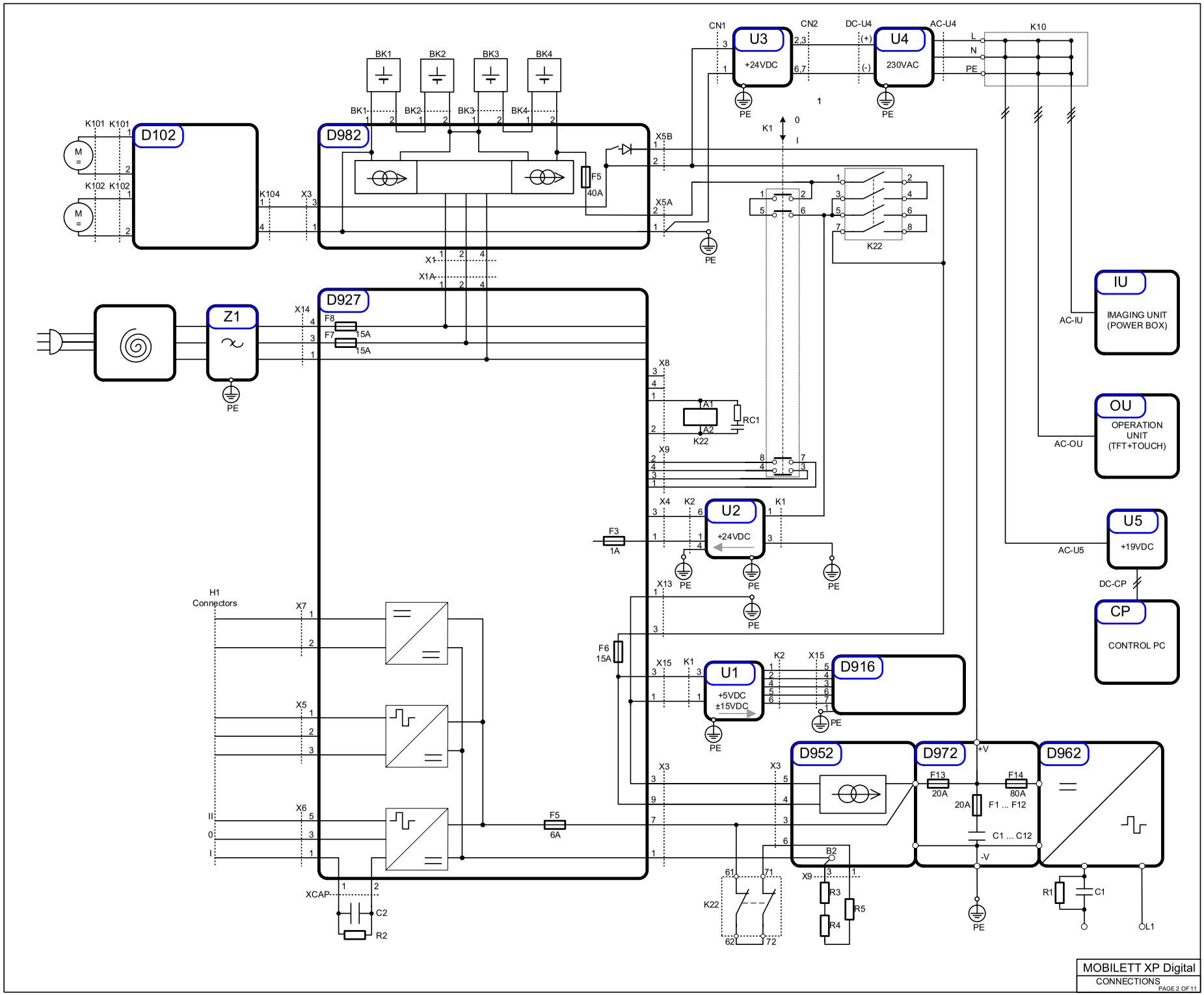
U3
+24VDC
U4
230VAC
CN1
CN2
DC-U4
AC-U4
K10
L
N
PE
BK1
BK2
BK3
BK4
D102
D982
K101
K102
K104
X3
X5B
X5A
F5
40A
K1
K22
X1
X1A
IU
IMAGING UNIT
(POWER BOX)
AC-IU
OU
OPERATION
UNIT
(TFT+TOUCH)
AC-OU
Z1
D927
F8
F7
15A
X14
X8
X9
A1
A2
RC1
U2
+24VDC
F3
1A
X4
X13
U5
+19VDC
AC-U5
DC-CP
CP
CONTROL PC
H1
Connectors
X7
X5
X6
F6
15A
U1
+5VDC
±15VDC
X15
D916
D952
D972
D962
F13
20A
F14
80A
F1 ... F12
C1 ... C12
+V
-V
F5
6A
XCAP
C2
R2
R1
C1
R3
R4
R5
B2
L1
MOBILETT XP Digital
CONNECTIONS
PAGE 2 OF 11

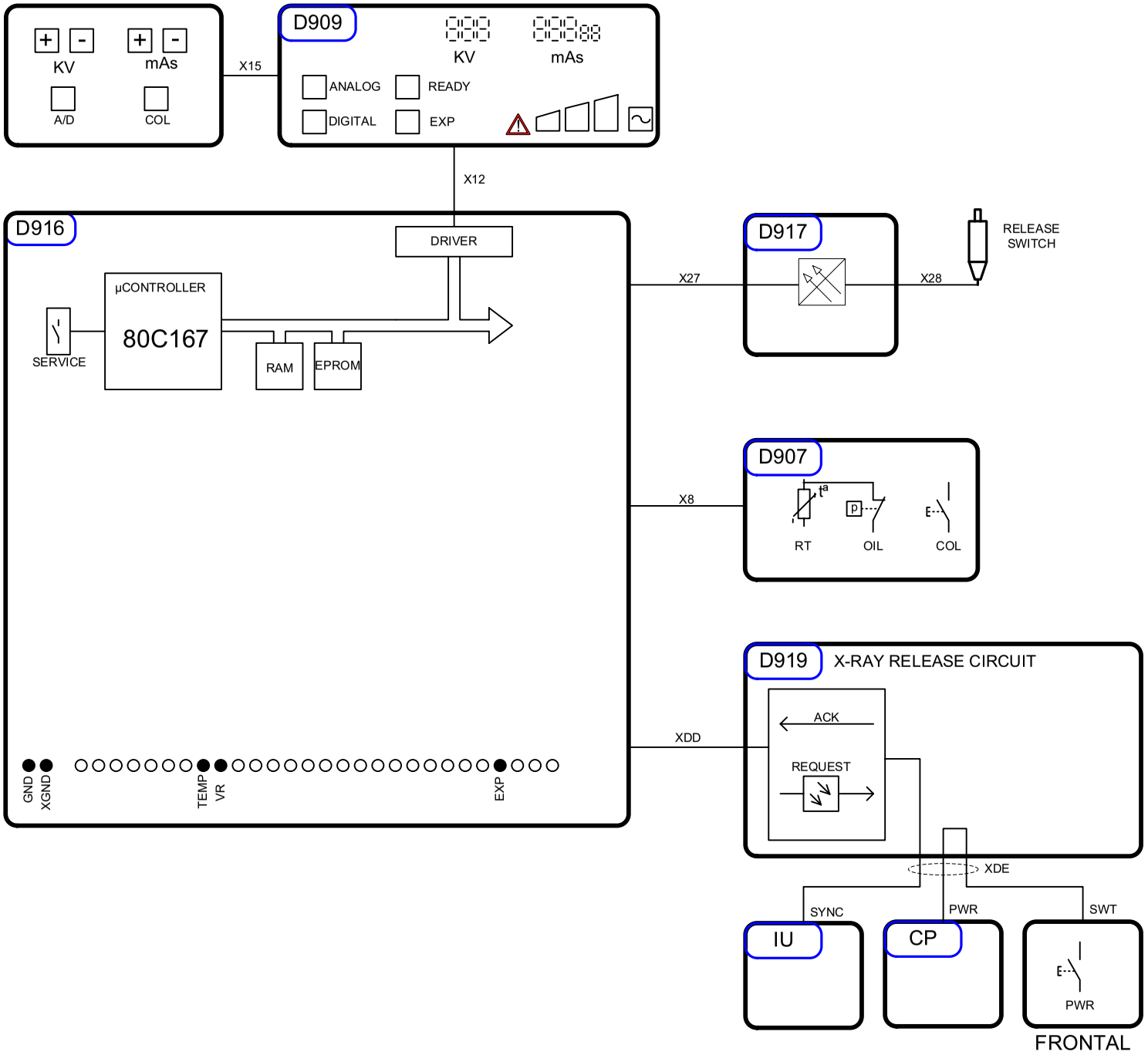
KV
mAs
A/D
COL
X15
D909
KV
mAs
ANALOG
READY
DIGITAL
EXP
X12
D916
DRIVER
µCONTROLLER
80C167
SERVICE
RAM
EPROM
GND
XGND
TEMP
VR
EXP
X27
D917
X28
RELEASE SWITCH
X8
D907
RT
OIL
COL
XDD
D919
X-RAY RELEASE CIRCUIT
ACK
REQUEST
XDE
SYNC
PWR
SWT
IU
CP
PWR
FRONTAL

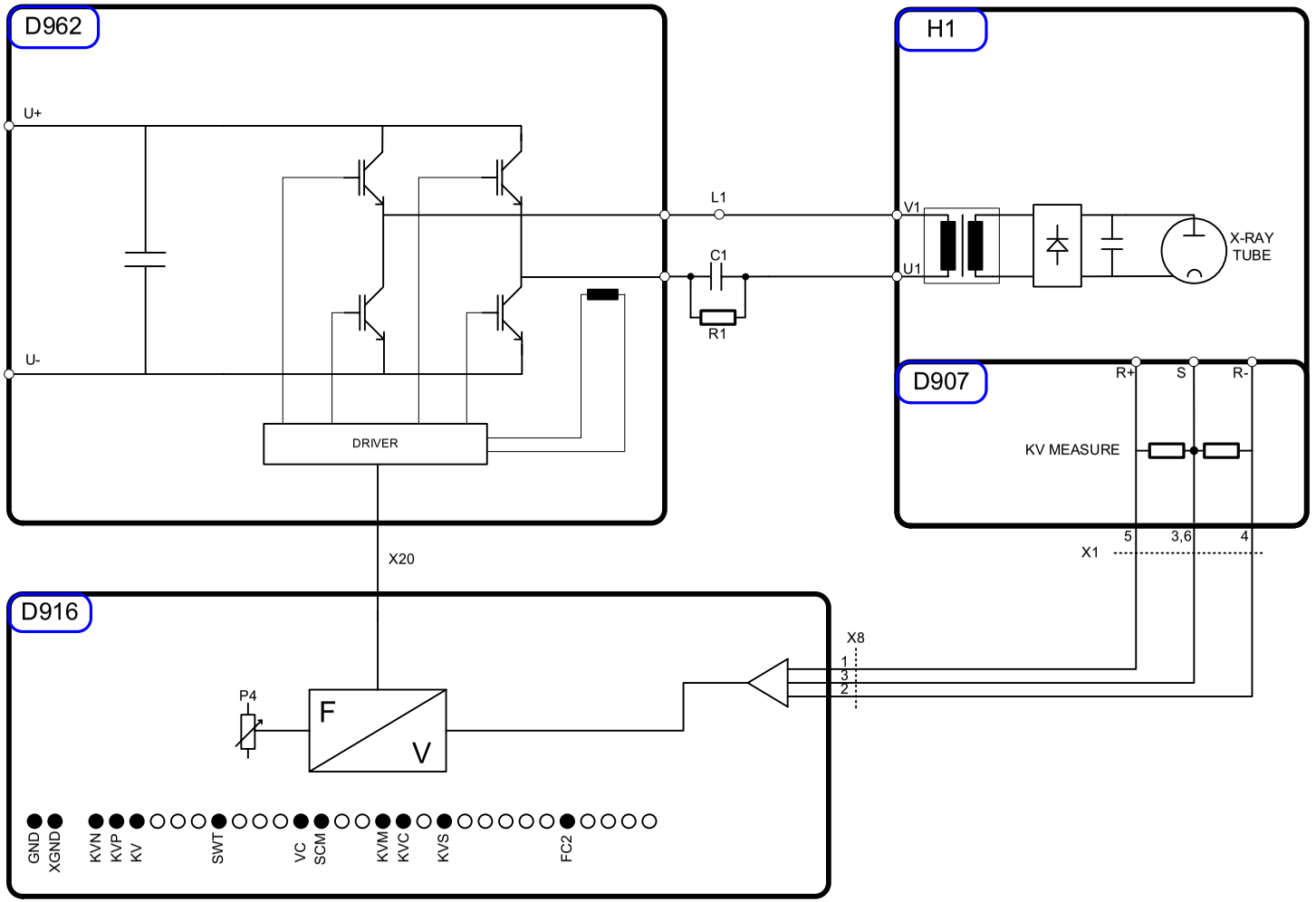
D962
U+
U-
DRIVER
L1
C1
R1
H1
V1
U1
X-RAY
TUBE
D907
R+
S
R-
KV MEASURE
5
3,6
4
X1
X20
D916
X8
1
3
2
P4
F
V
GND
XGND
KVN
KVP
KV
SWT
VC
SCM
KVM
KVC
KVS
FC2

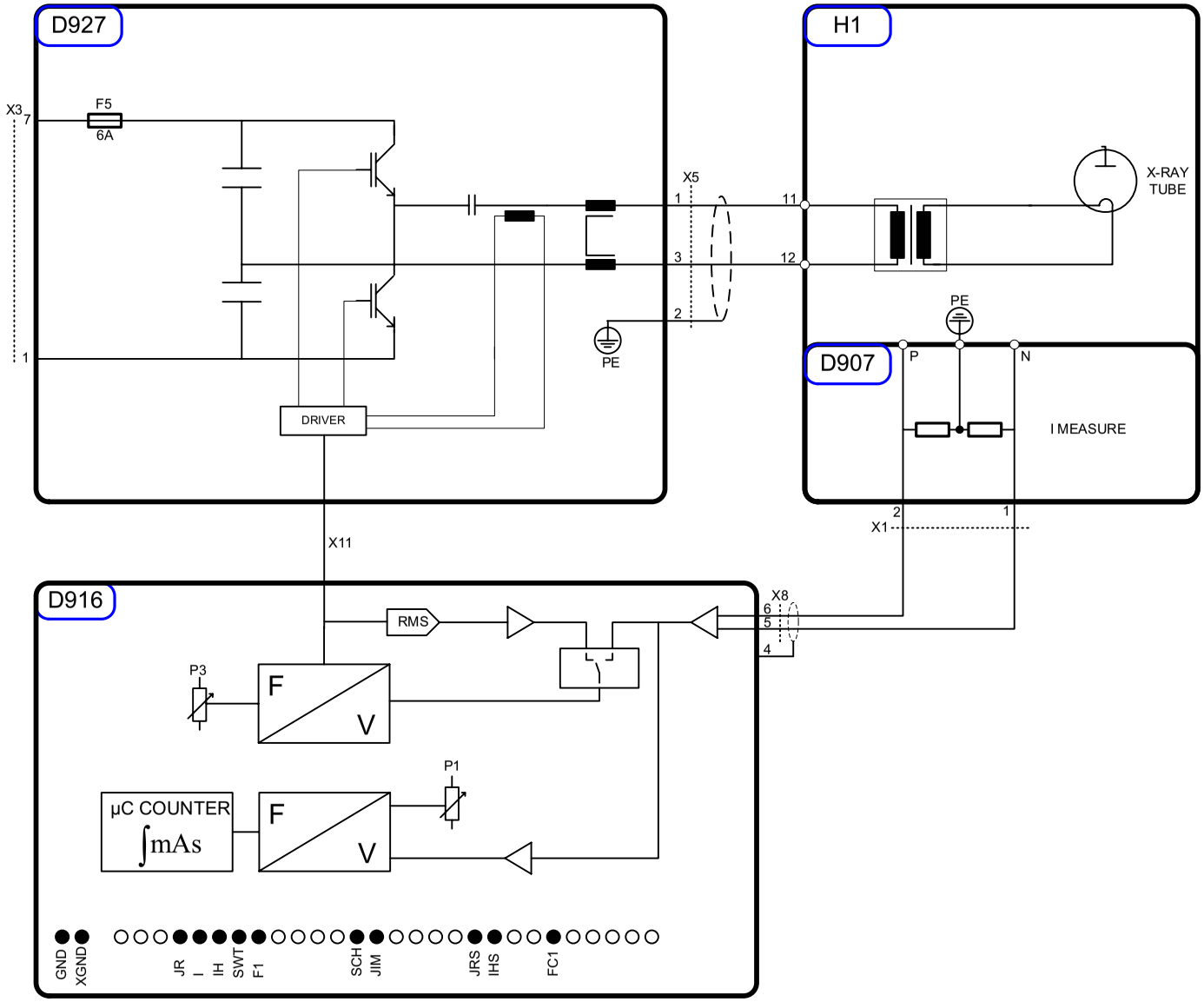
D927
X3
7
1
F5
6A
DRIVER
PE
X5
1
3
2
11
12
H1
X-RAY
TUBE
PE
D907
P
N
I MEASURE
2
1
X1
X11
D916
RMS
X8
6
5
4
P3
F
V
P1
µC COUNTER
∫mAs
F
V
GND
XGND
JR
I
IH
SWT
F1
SCH
JIM
JRS
IHS
FC1

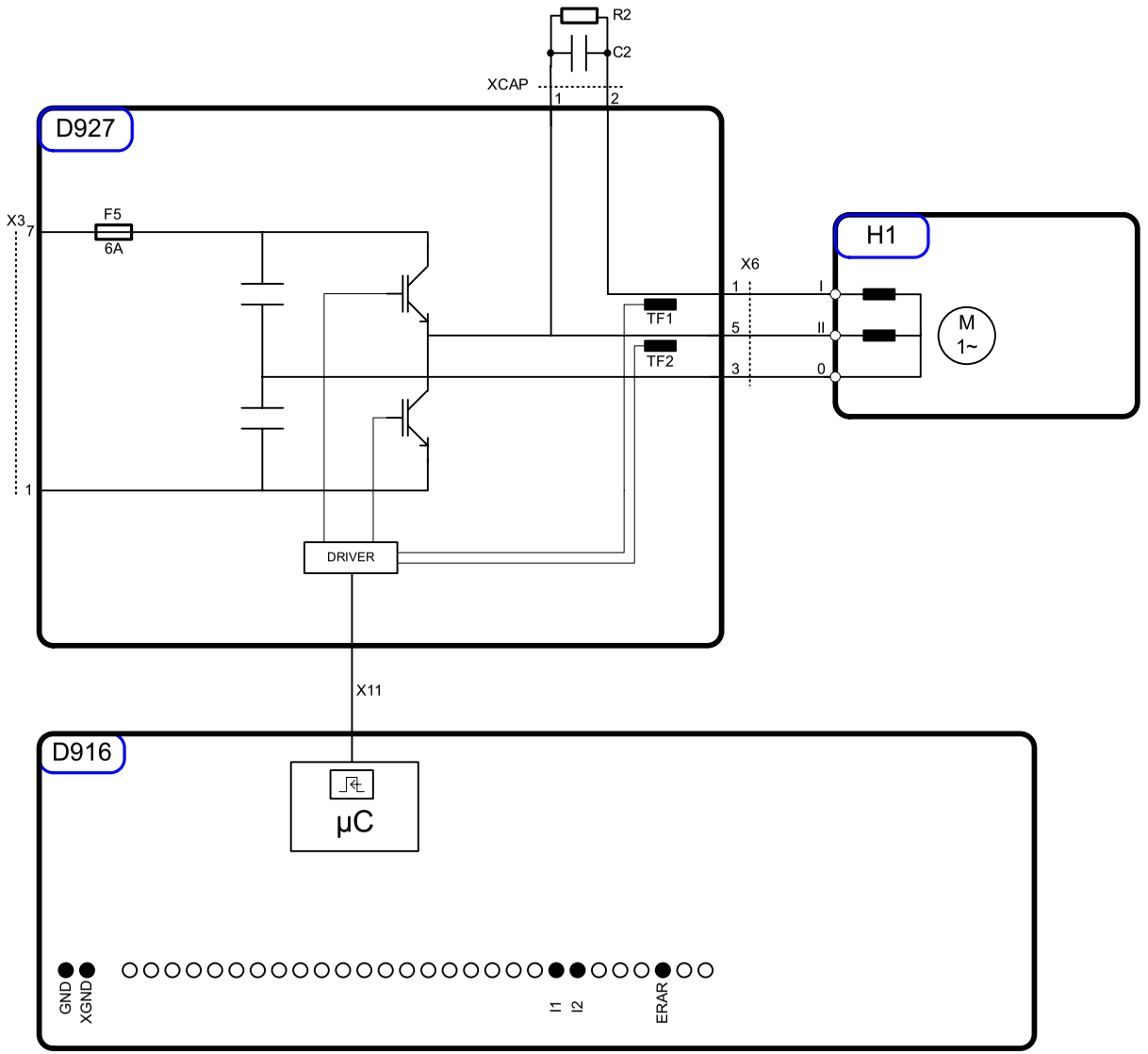
R2
C2
XCAP
1
2
D927
X3
7
F5
6A
1
TF1
TF2
X6
1
5
3
I
II
0
H1
M
1~
DRIVER
X11
D916
µC
GND
XGND
I1
I2
ERAR

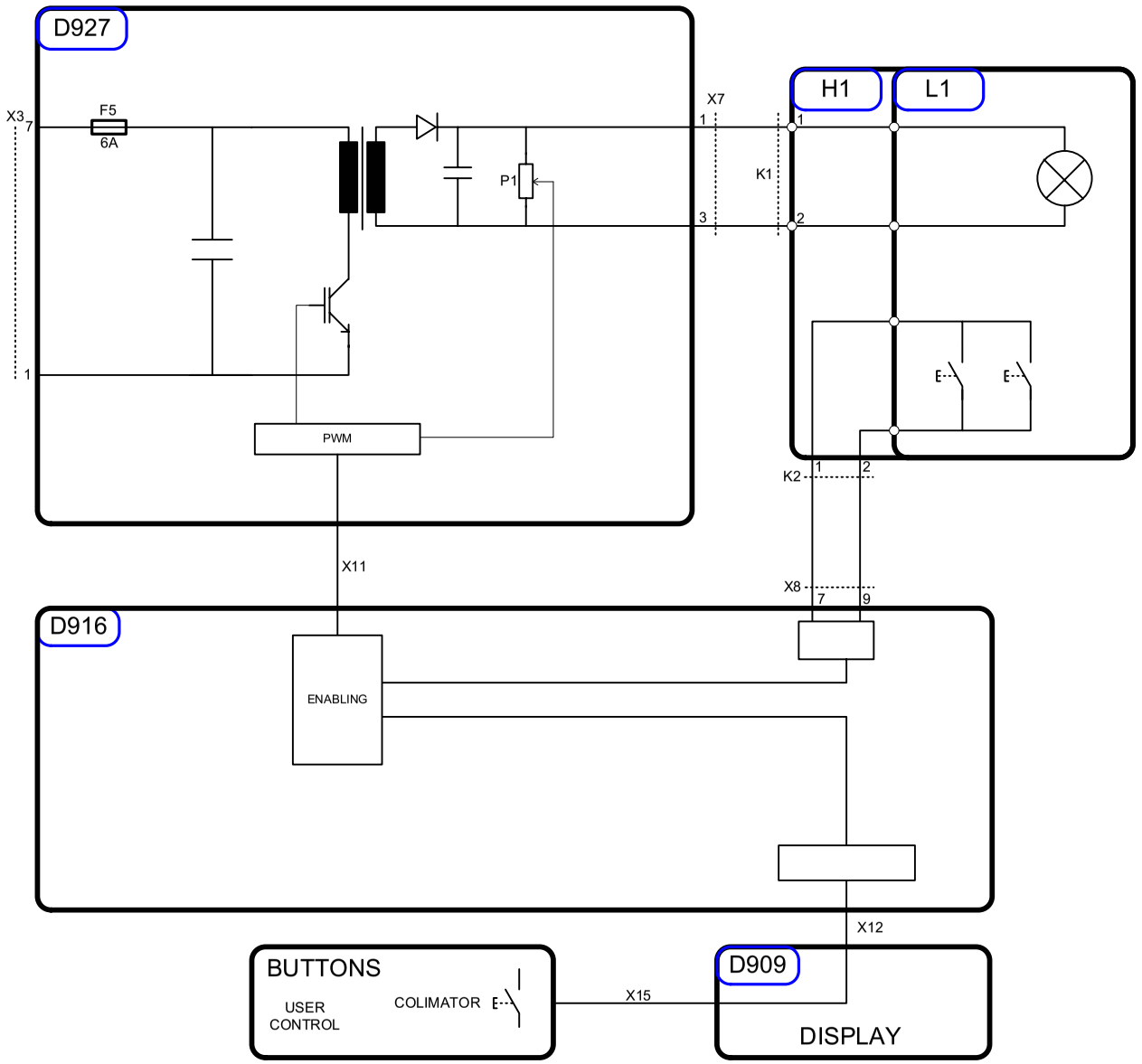
D927
X3
7
1
F5
6A
P1
PWM
X7
1
3
K1
H1
L1
1
2
E
E
K2
1
2
X11
X8
7
9
D916
ENABLING
X12
BUTTONS
USER
CONTROL
COLIMATOR
E
X15
D909
DISPLAY

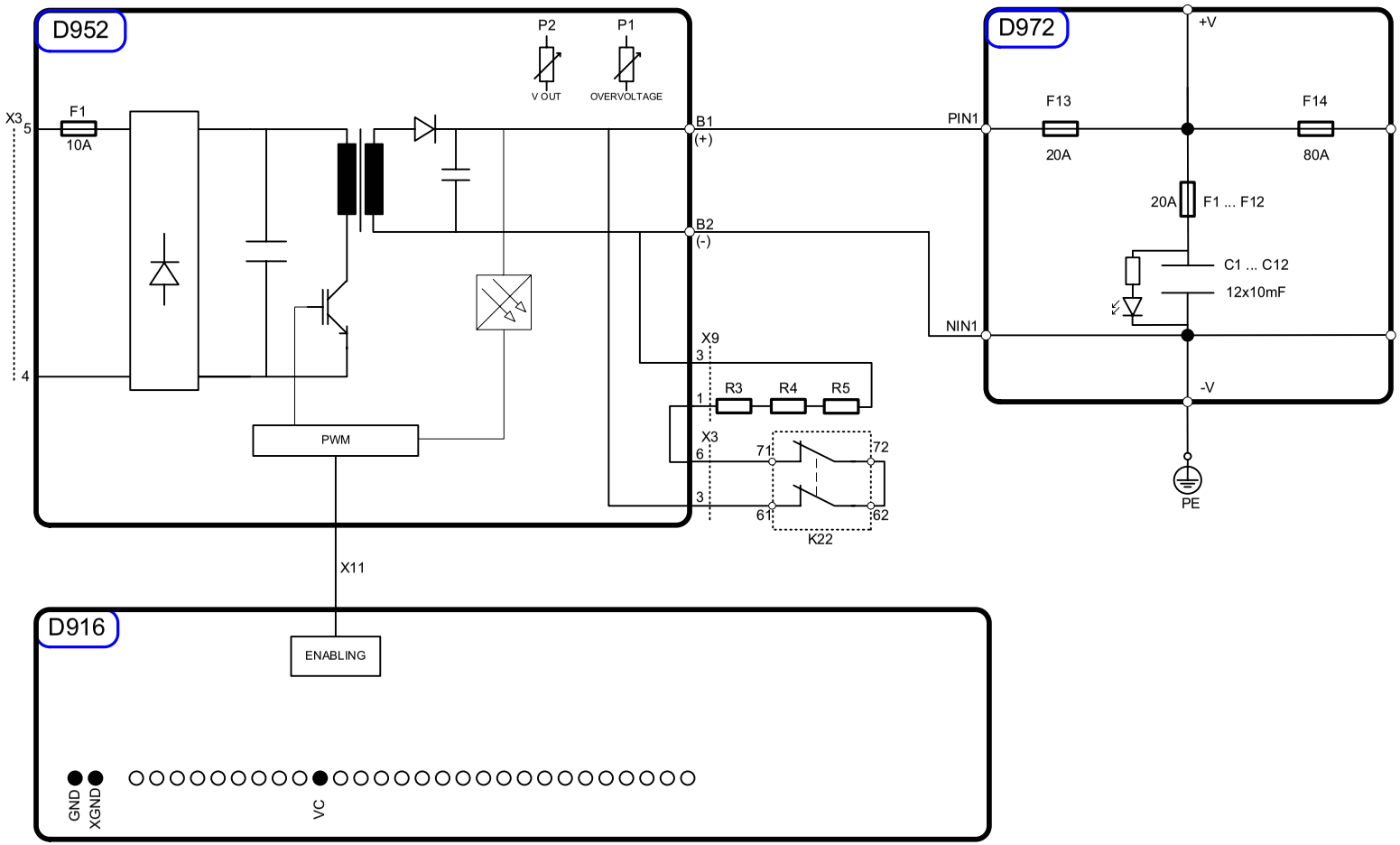
D952
P2
P1
V OUT
OVERVOLTAGE
X3
5
F1
10A
4
B1
(+)
B2
(-)
PWM
X9
3
1
R3
R4
R5
X3
6
3
71
72
61
62
K22
X11
D916
ENABLING
GND
XGND
VC
D972
+V
PIN1
NIN1
F13
20A
F14
80A
20A
F1 ... F12
C1 ... C12
12x10mF
-V
PE

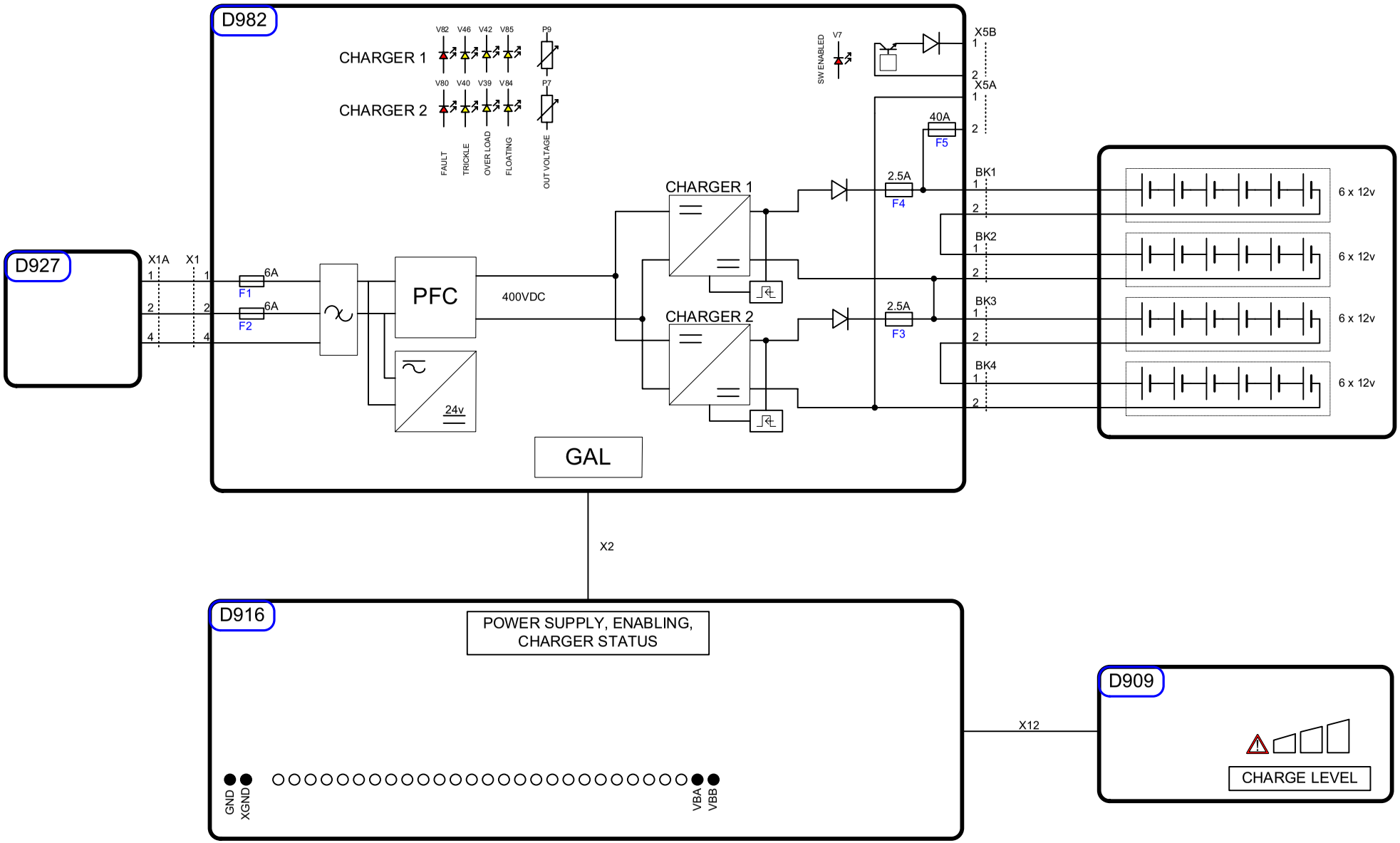
D982
CHARGER 1
CHARGER 2
V82 V46 V42 V85 P9
V80 V40 V39 V84 P7
FAULT
TRICKLE
OVER LOAD
FLOATING
OUT VOLTAGE
SW ENABLED
V7
X5B
X5A
40A
F5
2.5A
F4
2.5A
F3
BK1
BK2
BK3
BK4
6 x 12v
6 x 12v
6 x 12v
6 x 12v
D927
X1A
X1
6A
F1
6A
F2
PFC
400VDC
24v
CHARGER 1
CHARGER 2
GAL
X2
D916
POWER SUPPLY, ENABLING,
CHARGER STATUS
GND
XGND
VBA
VBB
X12
D909
CHARGE LEVEL

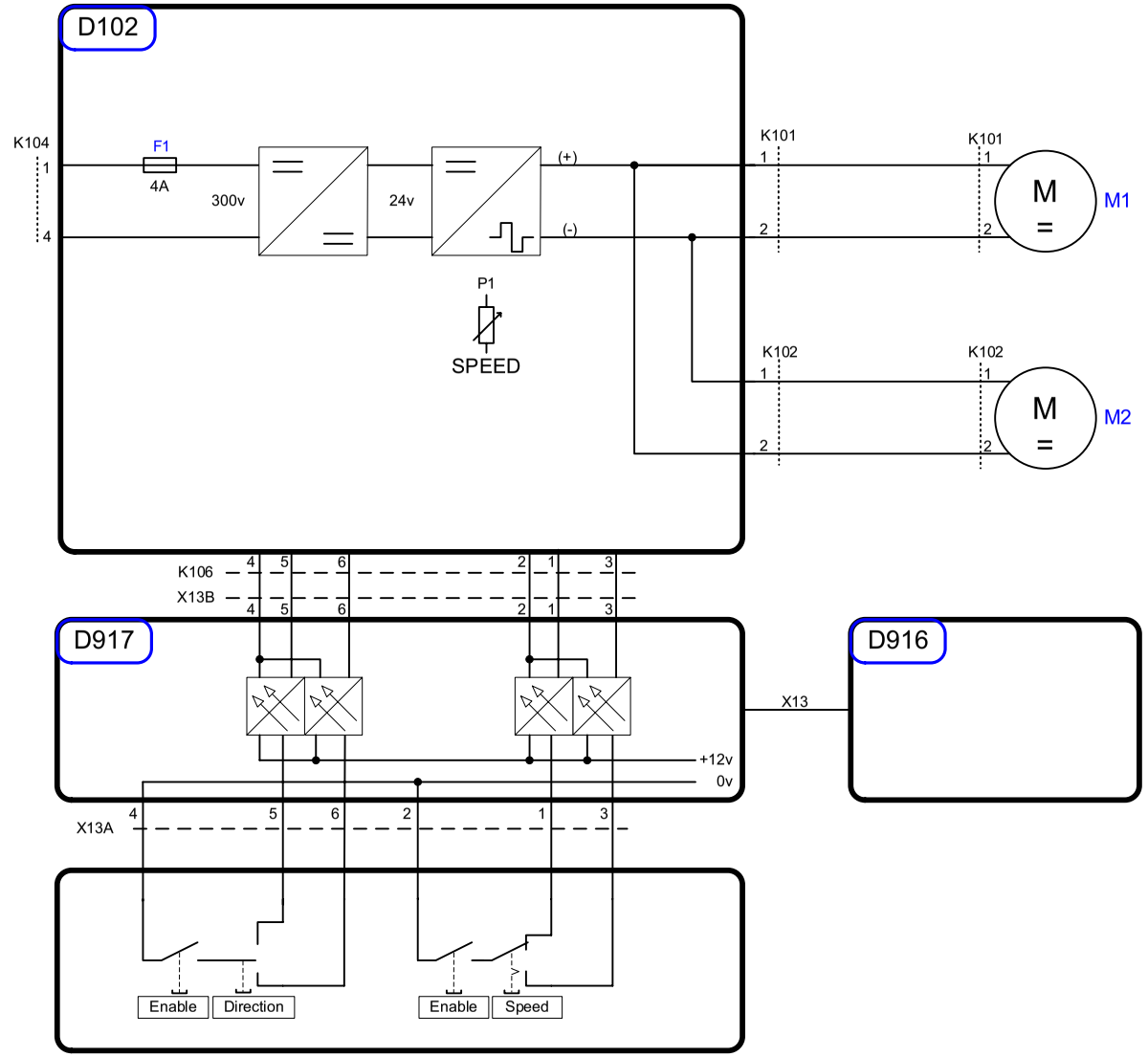

USER MOTOR CONTROL

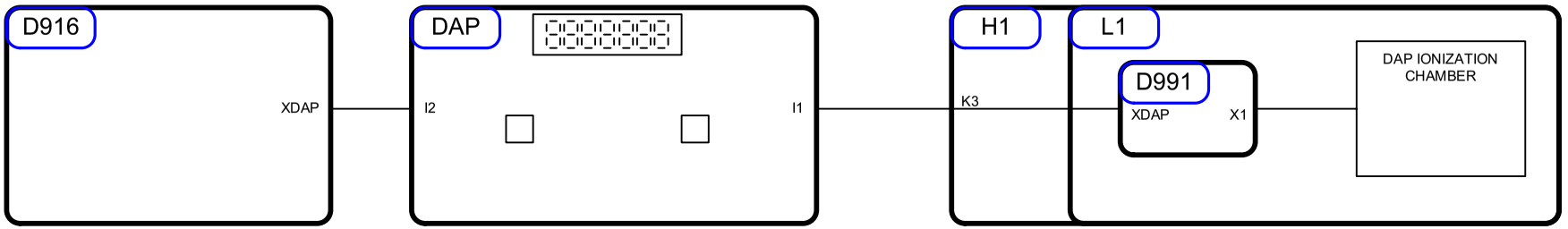
D916
XDAP
DAP
I2
I1
H1
K3
L1
D991
XDAP
X1
DAP IONIZATION
CHAMBER

Copying of this document and giving it to others and the use or communication of the contents thereof are forbidden without express authority. Offenders are liable to the payment of damages. All rights are reserved in the event of the grant of patent or the registration of a utility model or design.

Utan vårt uttryckliga tillstånd får denna handling icke utlämnas till obehörig eller kopieras. Efterhandling av detsamma innebär skadeståndsskyldighet. All rätt till handlingens innehåll förbjuder vår likaså all rätt, om patent eller mönsterskydd anmäldes. Överträdelse medför skadestånd

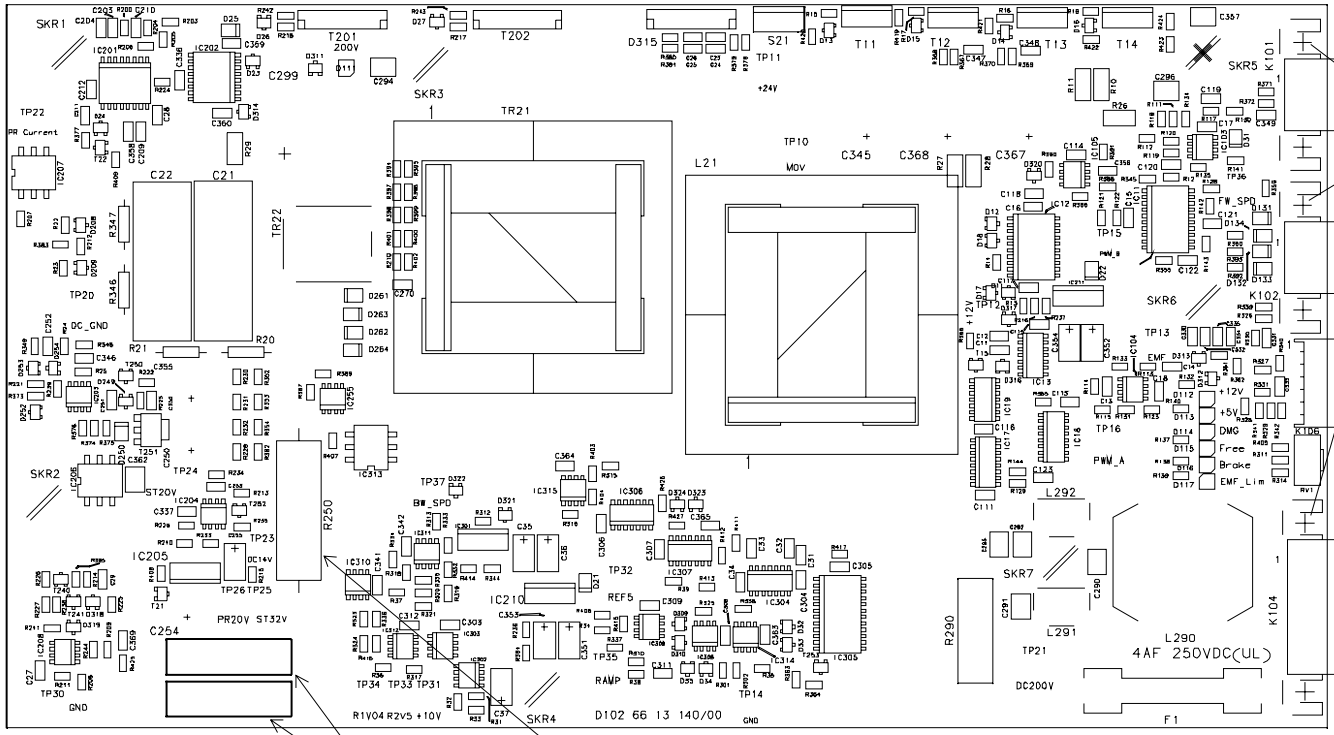

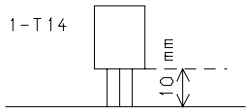

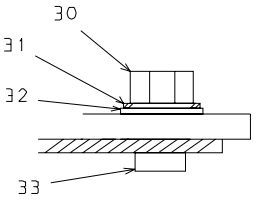

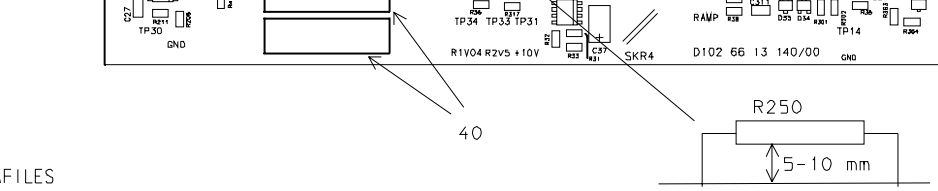

AVAILABLE DATAFILES

SIEMENS MS	6613140.BP1	SMD-data top side	Montering av SMD P-sida
GERBER 274X	6613157.PA1	Pastemask top side	Pastamask P-sida

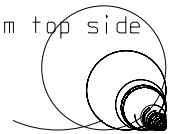

Vy.plac/Proj.method	Filn	Scan	Datum/Date	Utfärdad av/Issued by		Namnförtydl. kod/Name. dept.	
			Datum/Date	Granskad av/Reviewed by		Namnförtydl. kod/Name. dept.	
CAD-system MENTOR			Datum/Date	Godkänd av/Approved by		Namnförtydl. kod/Name. dept.	
SIEMENS Siemens-Elemo AB			Benämning/Denomination PCB Assembly			D102 Top side view	
			A F 8 3	Typnr/Type No X037E	Skala/Scale 1:1	Blad/Sheet 1(1)	Artikelnr/Part No 66 13 140	Rev./Ver 000

G F E D C B A

1 2 3 4 5

SIEMENS FG/MED
Als Betriebsgeheimnis anvertraut. Alle Rechte vorbehalten
Propietary data, company confidential. All rights reserved
Confie a titre de secret d'entreprise. Tous drois reserve
Confiado como secreto industrial. Todos los derechos reservados

D907V1

SERIGRAFIA

D907

0 56 08 240 X074J
ADAPTER

D907V1.PCB 10/03

SIEMENS FG/MED
Als Betriebsgeheimnis anvertraut. Alle Rechte vorbehalten
Propietary data, company confidential. All rights reserved
Confie a titre de secret d' entreprise. Tous drois reserve
Confiado como secreto industrial. Todos los derechos reservados

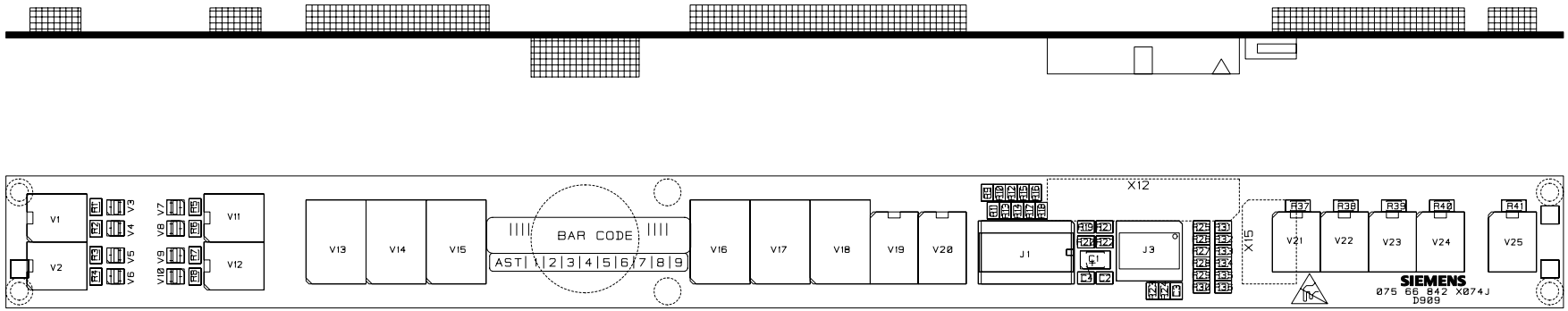

D909
075 66 842 X074J
DISPLAY

Scale: 4/5
D909V1.PCB (9/04)

X074J-D909-1()-1

SIEMENS FG/MED
Als Betriebsgeheimnis anvertraut. Alle Rechte vorbehalten
Propietary data, company confidential. All rights reserved
Confie a titre de secret d' entreprise. Tous drois reserve
Confiado como secreto industrial. Todos los derechos reservados

D916V1

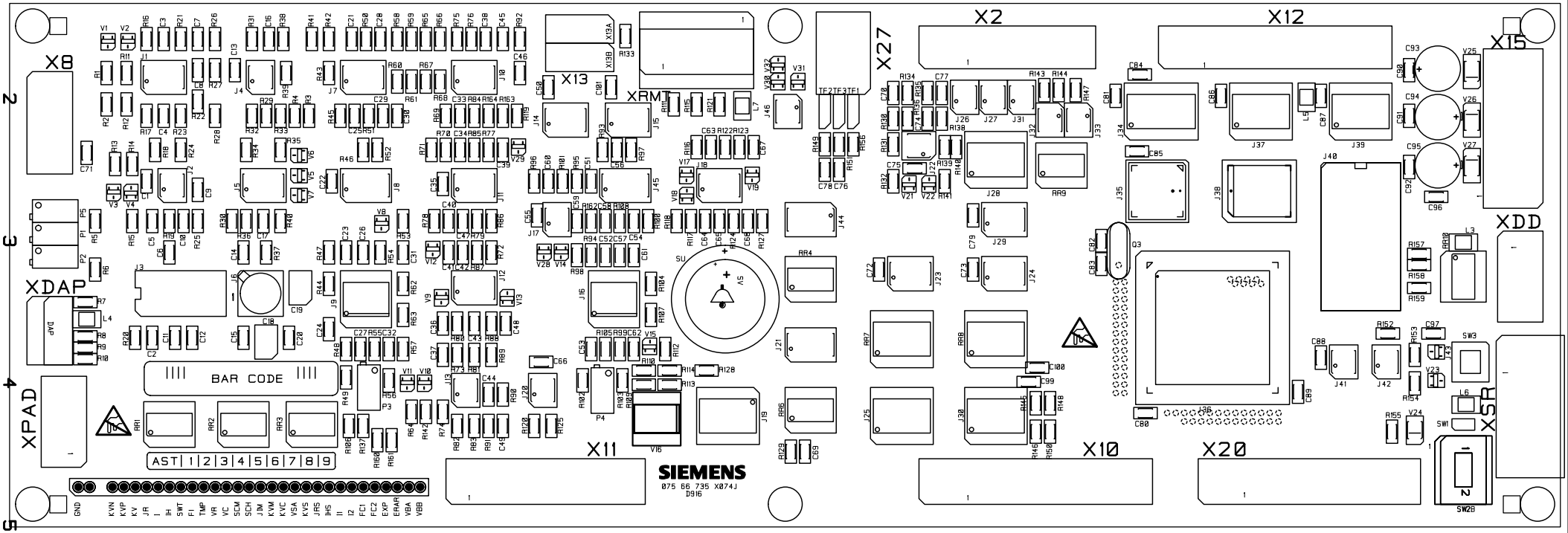

D916V1
075 66 735 X074J
CPU
MOBILETT XP

X074J-D916-1(S)-1

Scale: 4/5
D916V1.PCB 11/03

SIEMENS FG/MED
Alle Betriebsgeheimnis anvertraut. Alle Rechte vorbehalten
Proprietary data, company confidential. All rights reserved
Confie a titre de secret d' entreprise. Tous droits reserve
Confiado como secreto industrial. Todos los derechos reservados

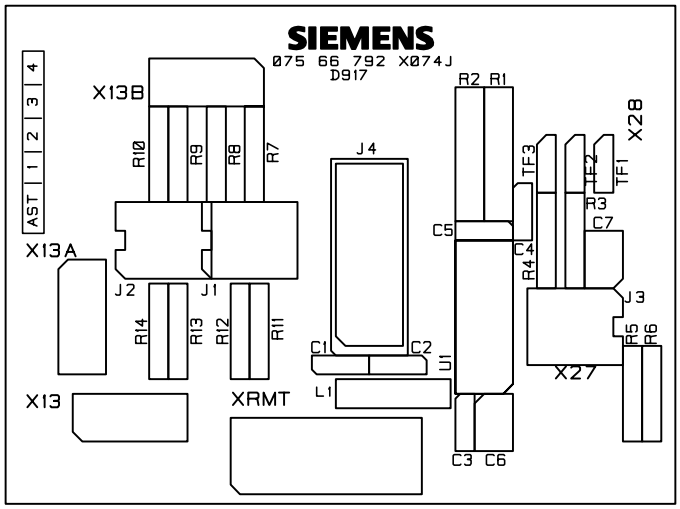

D917

075 66 792 X074J
OPTO-ADAPTER

D917VP01.PCB 1/04

1	2	3	4	5	X074J-D917-1(S)-1

SIEMENS FG/MED
Als Betriebsgeheimnis anvertraut. Alle Rechte vorbehalten
Propietary data, company confidential. All rights reserved
Confie a titre de secret d' entreprise. Tous droits reserve
Confiado como secreto industrial. Todos los derechos reservados

D919V1

D919

075 66 859 X074J
DIGITAL ADAPTER

D919V1.SCM (9/04)

1 2 3 4 5

X074J-D919-1(S)-1

D927V1

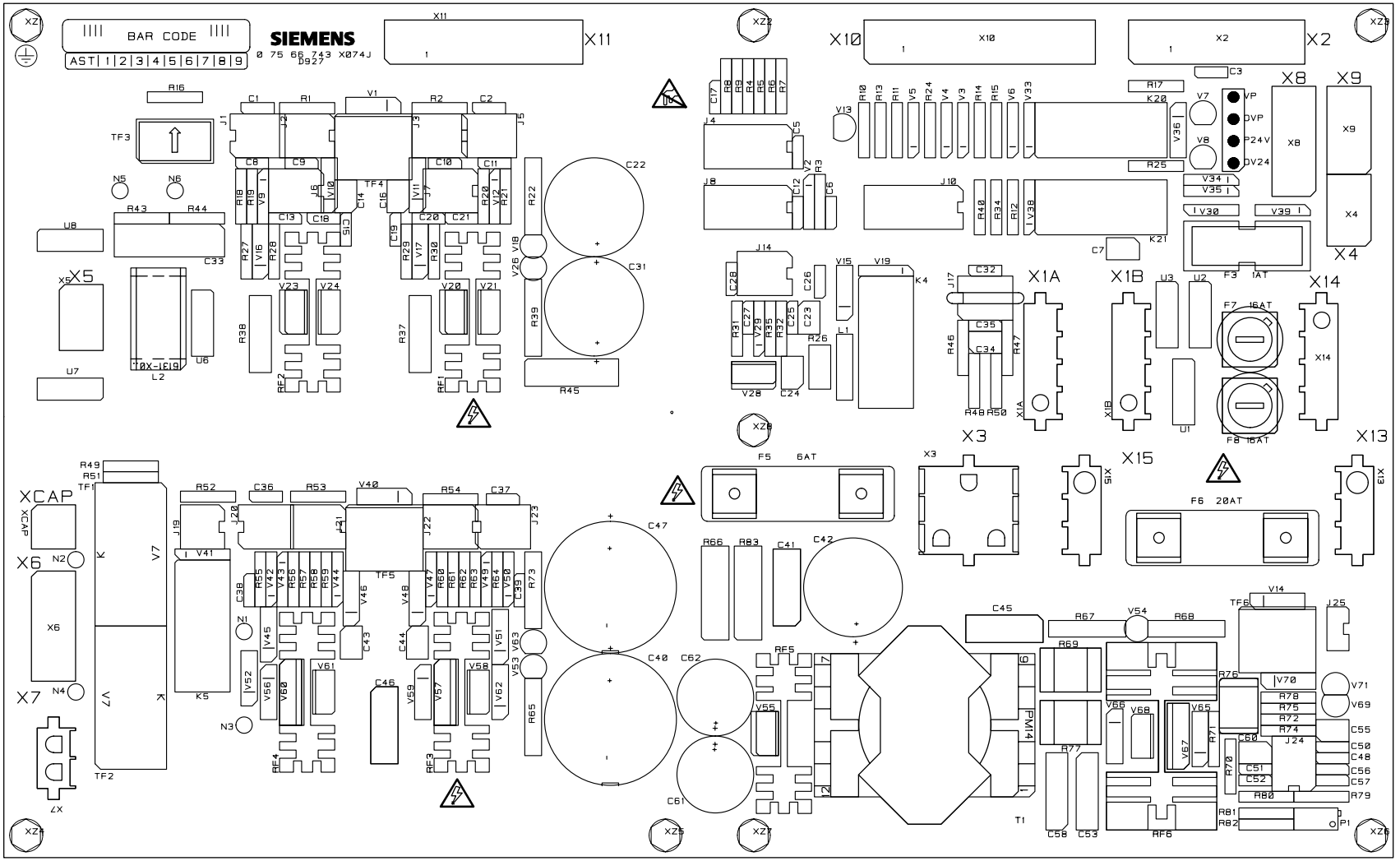

D927V1
0 75 66 743 X043J
POWER

SCALE: 7/10
D927V1.SCM 10/03

SIEMENS FG/MED
Als Betriebsgeheimnis anvertraut. Alle Rechte vorbehalten
Proprietary data, company confidential. All rights reserved
Confie a titre de secret d'entreprise. Tous droits reserve
Confiado como secreto industrial. Todos los derechos reservados

1 2 3 4 5 6 7 8

X074J-D927-1()-1

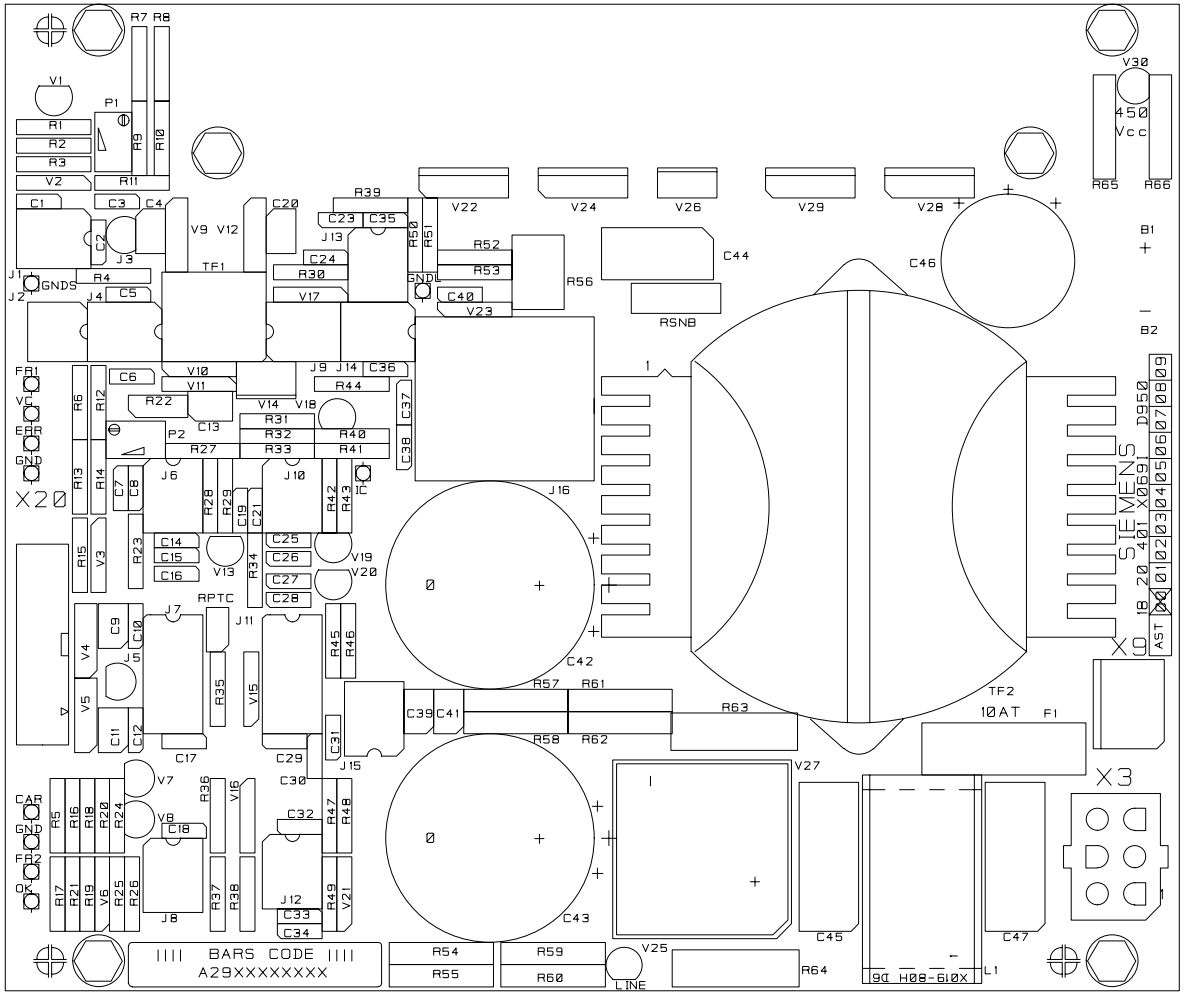

PLANO DE SERIGRAFIA

18 20 401 X0691

D950

D950

18 20 401 X0691
KONDENSATORBANK LADUNG
CAPACITOR BANK CHARGER
CHARGEUR DE CONDENSATEUR
CARGADOR DE CONDESADORES

D962V1 TopSilk

SIEMENS FG/MED
Als Betriebsgeheimnis anvertraut. Alle Rechte vorbehalten
Proprietary data, company confidential. All rights reserved
Confie a titre de secret d'entreprise. Tous drois reserve
Confiado como secreto industrial. todos los derechos reservados

D962
0 75 75 66 651 X074J
INVERTER KV

D962V1.PCB 10/03

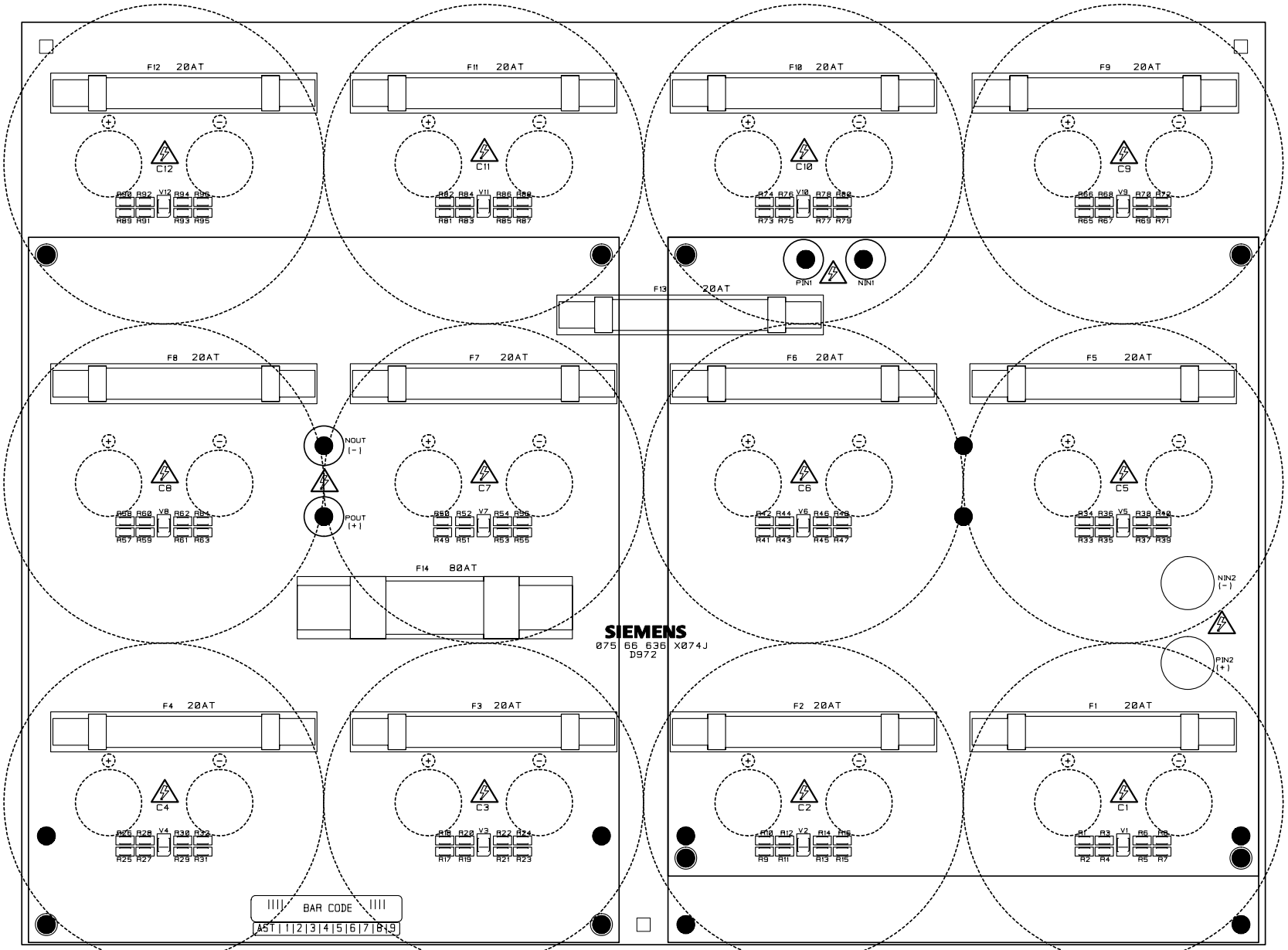

SIEMENS FG/MED

Als Betriebsgeheimnis anvertraut. Alle Rechte vorbehalten
Proprietary data, company confidential. All rights reserved
Confia a titre de secret d'entreprise. Tous droits reserve
Confiado como secreto industrial. Todos los derechos reservados

SCALE: 3/5
D972V1.SCM 11/03

X074J-D972-1(S)-1

SIEMENS FG/MED
Als Betriebsgeheimnis anvertraut. Alle Rechte vorbehalten
Propietary data, company confidential. All rights reserved
Confie a titre de secret d' entreprise. Tous drois reserve
Confiado como secreto industrial. Todos los derechos reservados

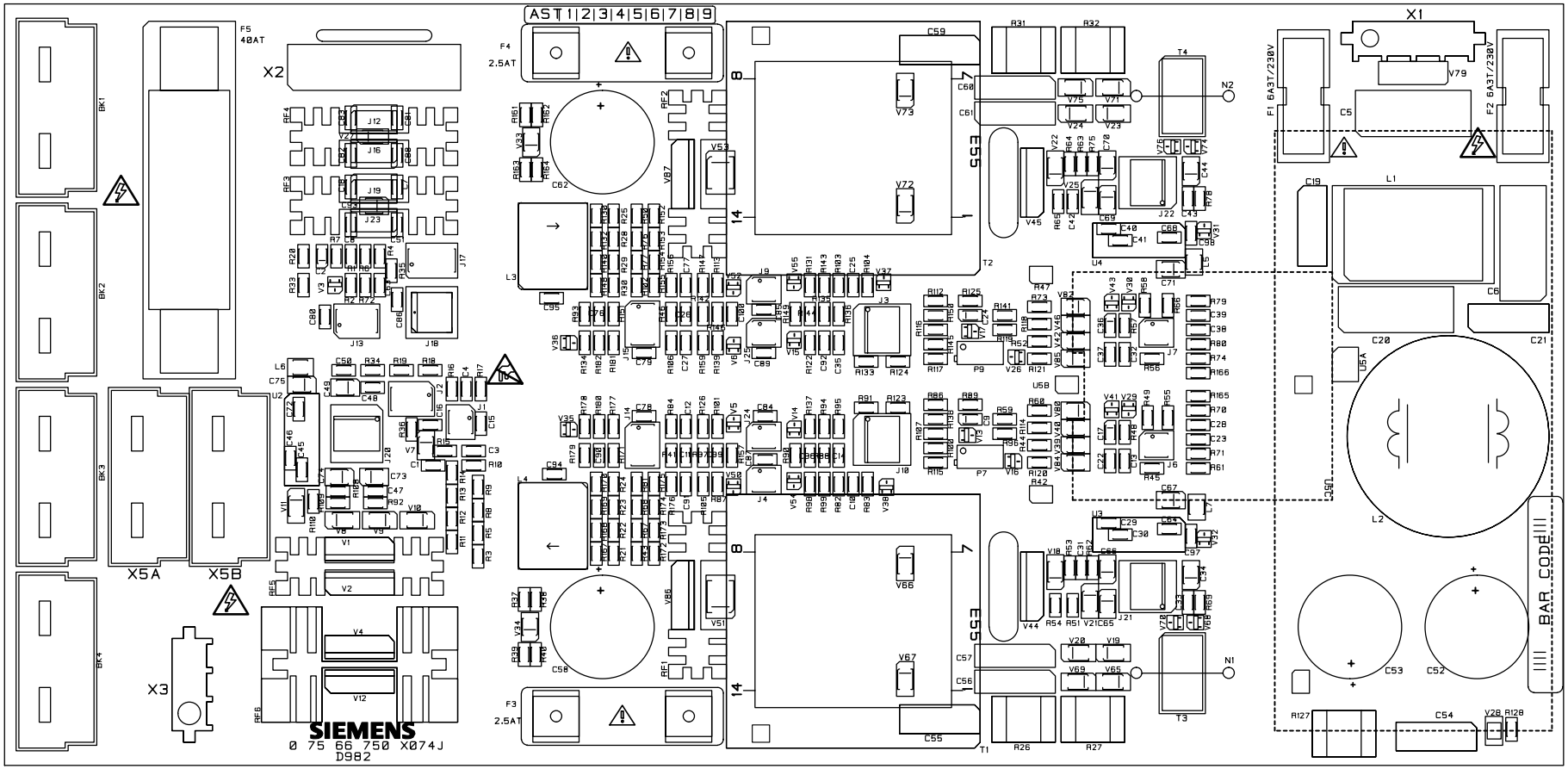

D982

075 66 750 X074J
BATTERY LOADER

SCALE: 7/10
D982V1.PCB 11/03

X074J-D982-1(S)-1

SIEMENS FG/MED
Als Betriebsgeheimnis anvertraut. Alle Rechte vorbehalten
Proprietary data, company confidential. All rights reserved
Confie a titre de secret d'entreprise. Tous drois reserve
Confiado como secreto industrial. Todos los derechos reservados

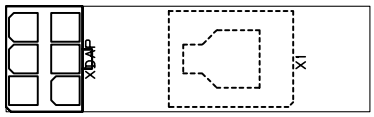

D991

0 75 66 768 X074J
DAP ADAPTER

D991V1.PCB 11/03

1 2 3 4 5

X074J-D991-1()-1